REV	DATE	DESCRIPTION	DRAWN	CHECKED
-	06/02/21	DRAWING CREATED	MF	MF

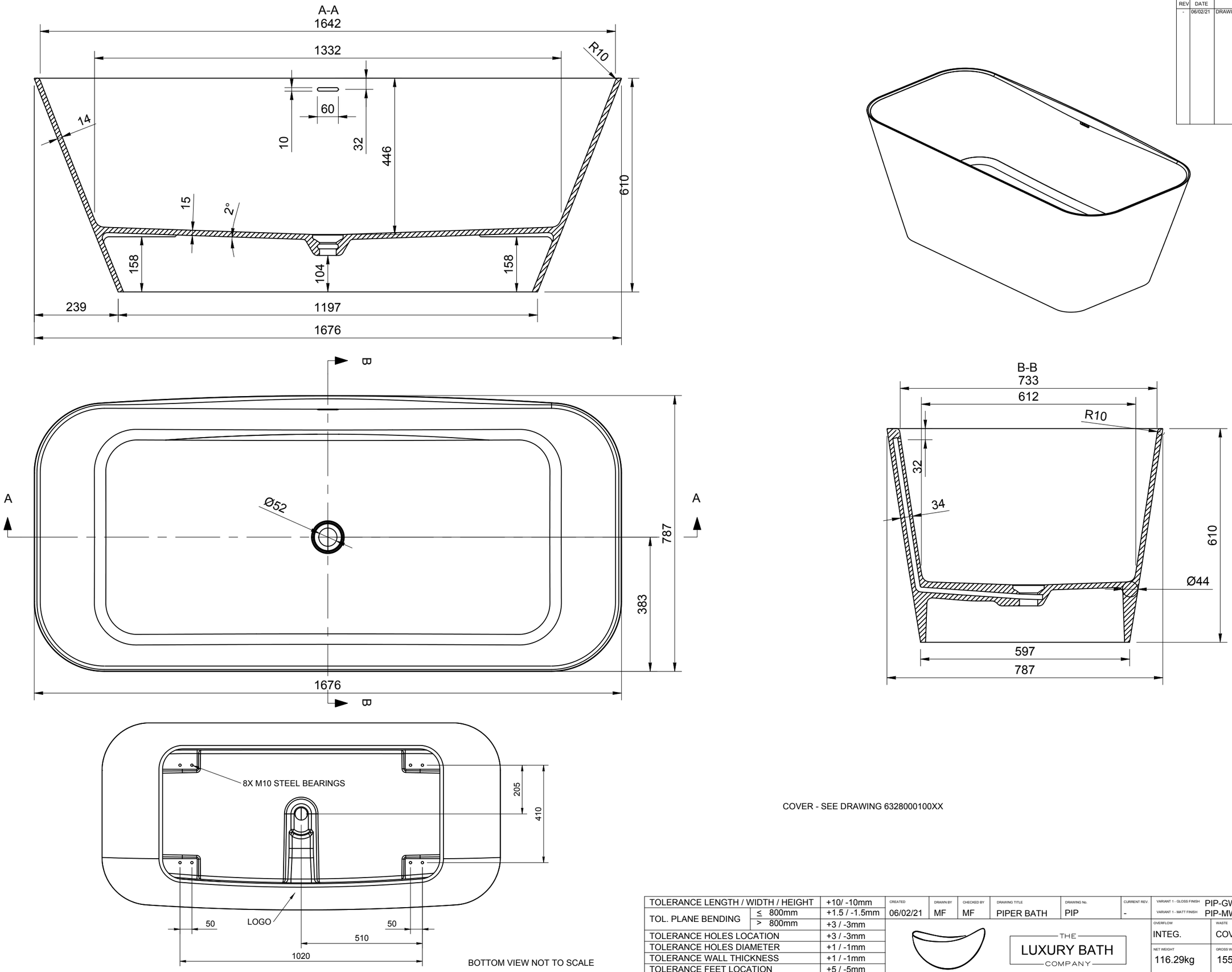

COVER - SEE DRAWING 6328000100XX

BOTTOM VIEW NOT TO SCALE

TOLERANCE LENGTH / WIDTH / HEIGHT		+10/ -10mm
TOL. PLANE BENDING	≤ 800mm	+1.5 / -1.5mm
	> 800mm	+3 / -3mm
TOLERANCE HOLES LOCATION		+3 / -3mm
TOLERANCE HOLES DIAMETER		+1 / -1mm
TOLERANCE WALL THICKNESS		+1 / -1mm
TOLERANCE FEET LOCATION		+5 / -5mm

CREATED	DRAWN BY	CHECKED BY	DRAWING TITLE	DRAWING No.	CURRENT REV.	VARIANT 1 - GLOSS FINISH / VARIANT 1 - MATT FINISH	SHEET	SHEET SIZE	SCALE
06/02/21	MF	MF	PIPER BATH	PIP	-	PIP-GW / PIP-MW	1/1	A3	1:10

THE LUXURY BATH COMPANY

OVERFLOW	WASTE	TAPHOLE	MAIN DIMENSIONS
INTEG.	COVER	0	1676 X 914 X 610

NET WEIGHT	GROSS WEIGHT	BATH VOLUME
116.29kg	155kg	FULL = 425L OVERFLOW= 380L